Mobile Project

UNIT: E-Learning Management System

Prepared by
Tayeb Lagha

AIM & OBJECTIVE

- Know how to Work with Ionic Framework
- Constructing Use Case Diagram
- Constructing class Diagram
- Constructing Sequence Diagram

1) Use Case

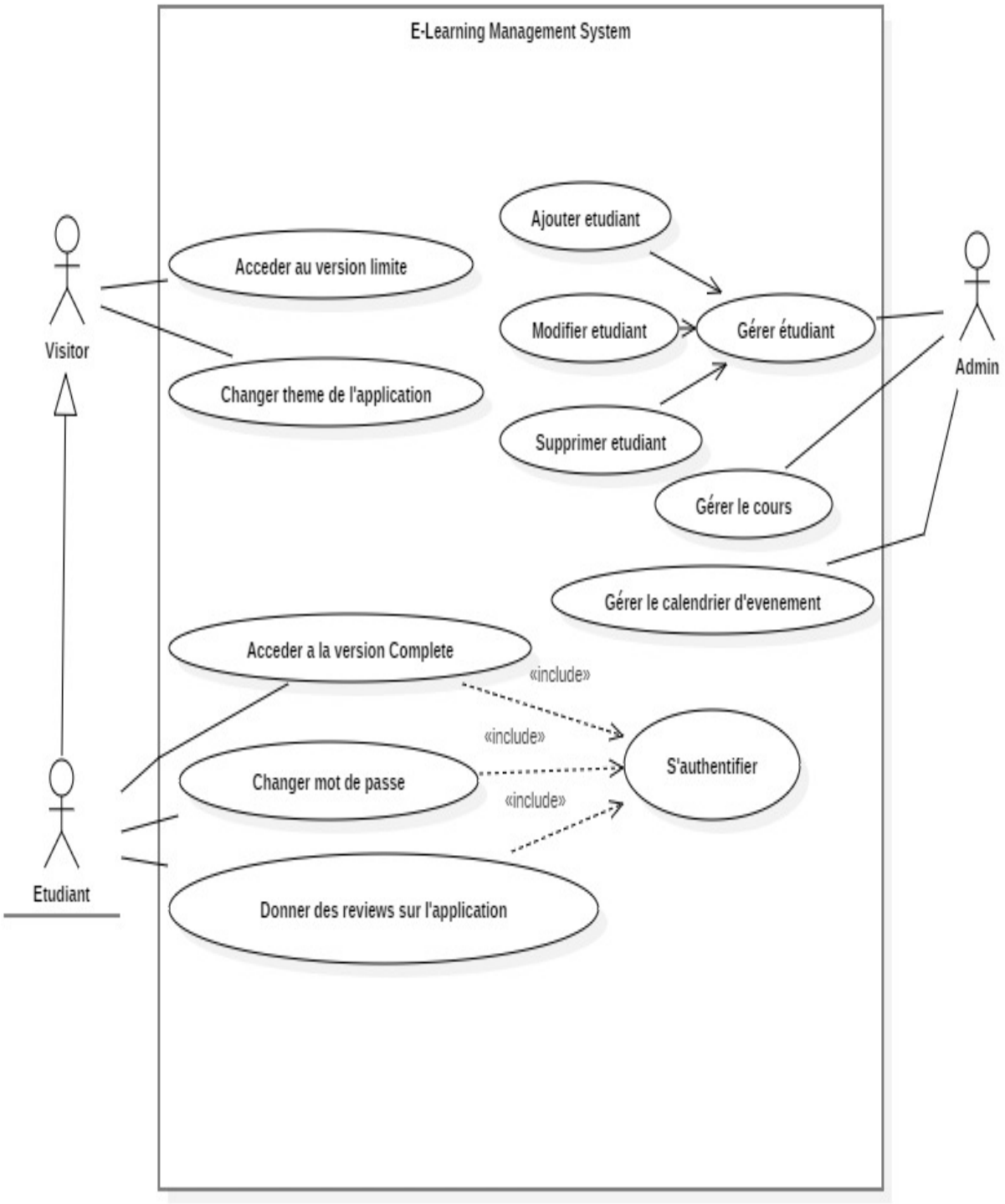
E-Learning Management System
Visitor
Acceder au version limite
Changer theme de l'application
Ajouter etudiant
Modifier etudiant
Gérer étudiant
Supprimer etudiant
Gérer le cours
Gérer le calendrier d'evenement
Admin
Acceder a la version Complete
«include»
«include»
«include»
S'authentifier
Changer mot de passe
Etudiant
Donner des reviews sur l'application

2) Class Diagram

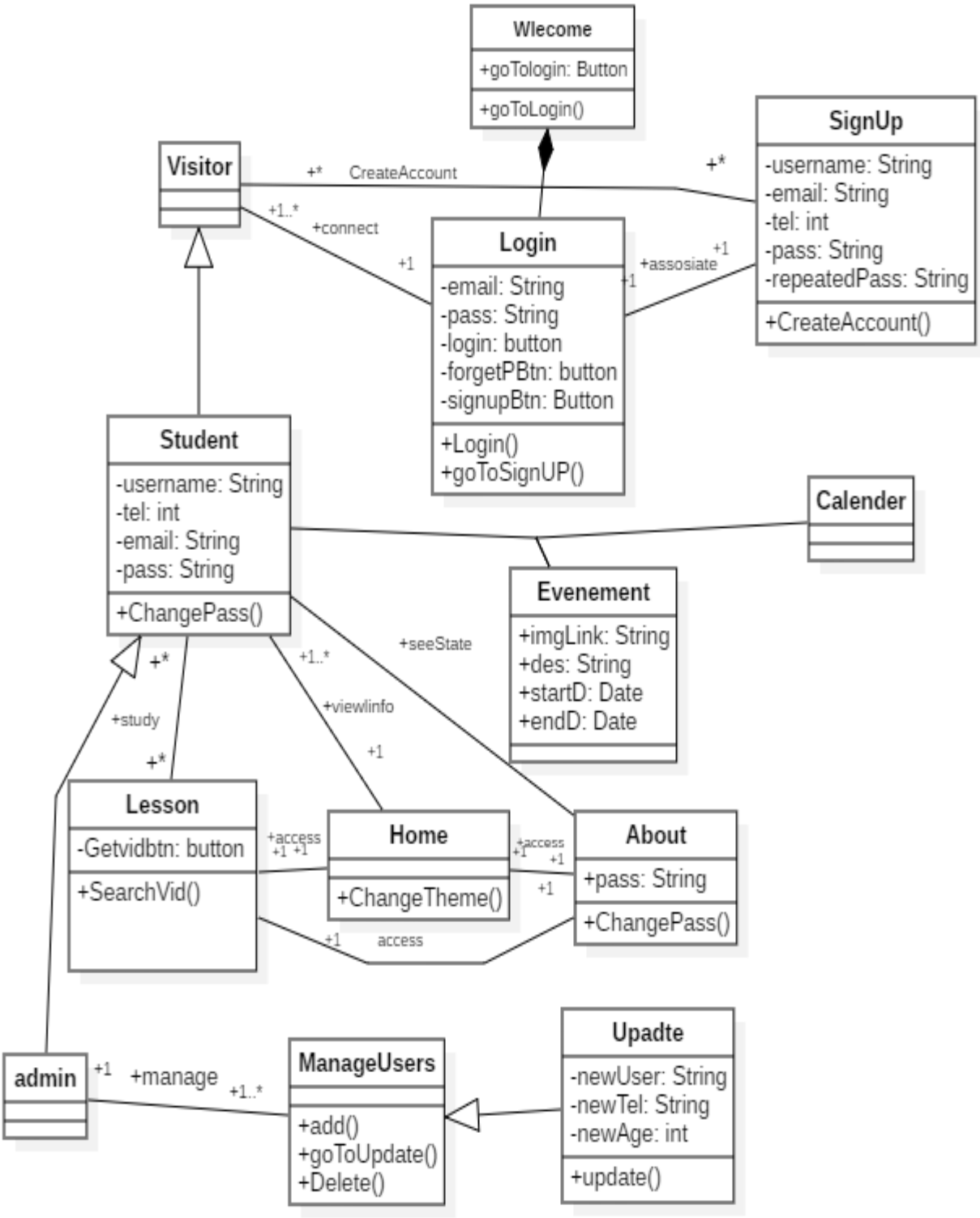

3) Sequence Diagram

a. Authentification

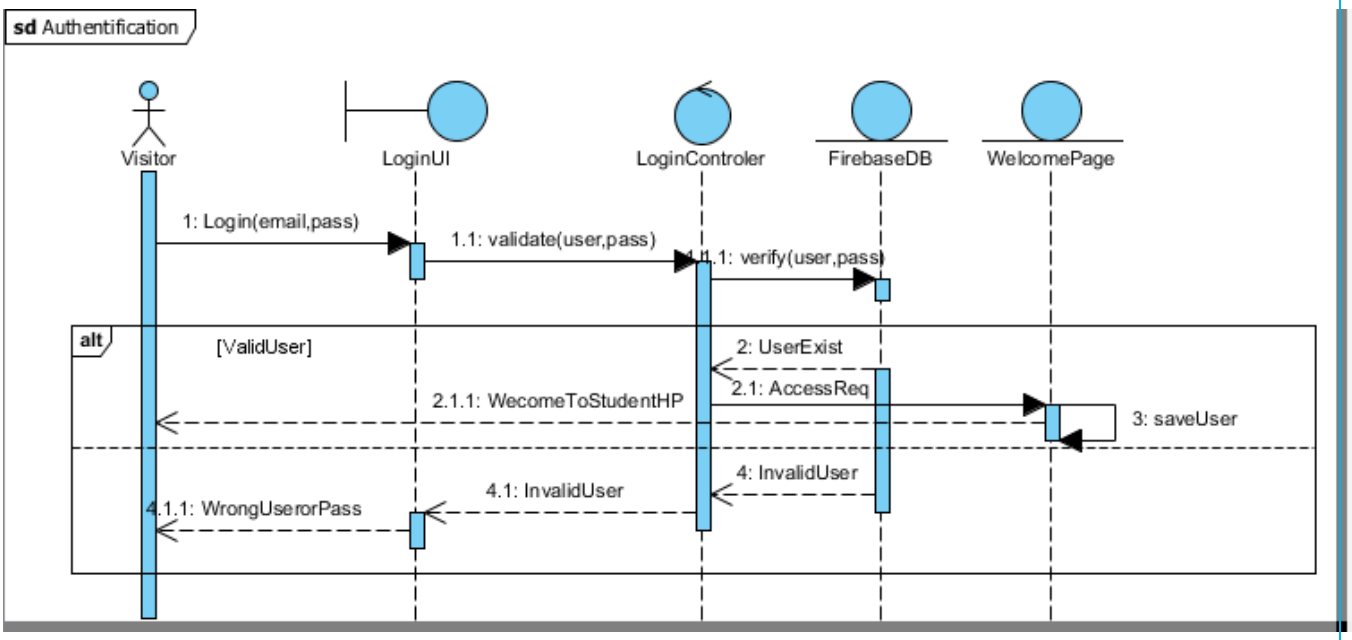

b. Sign UP

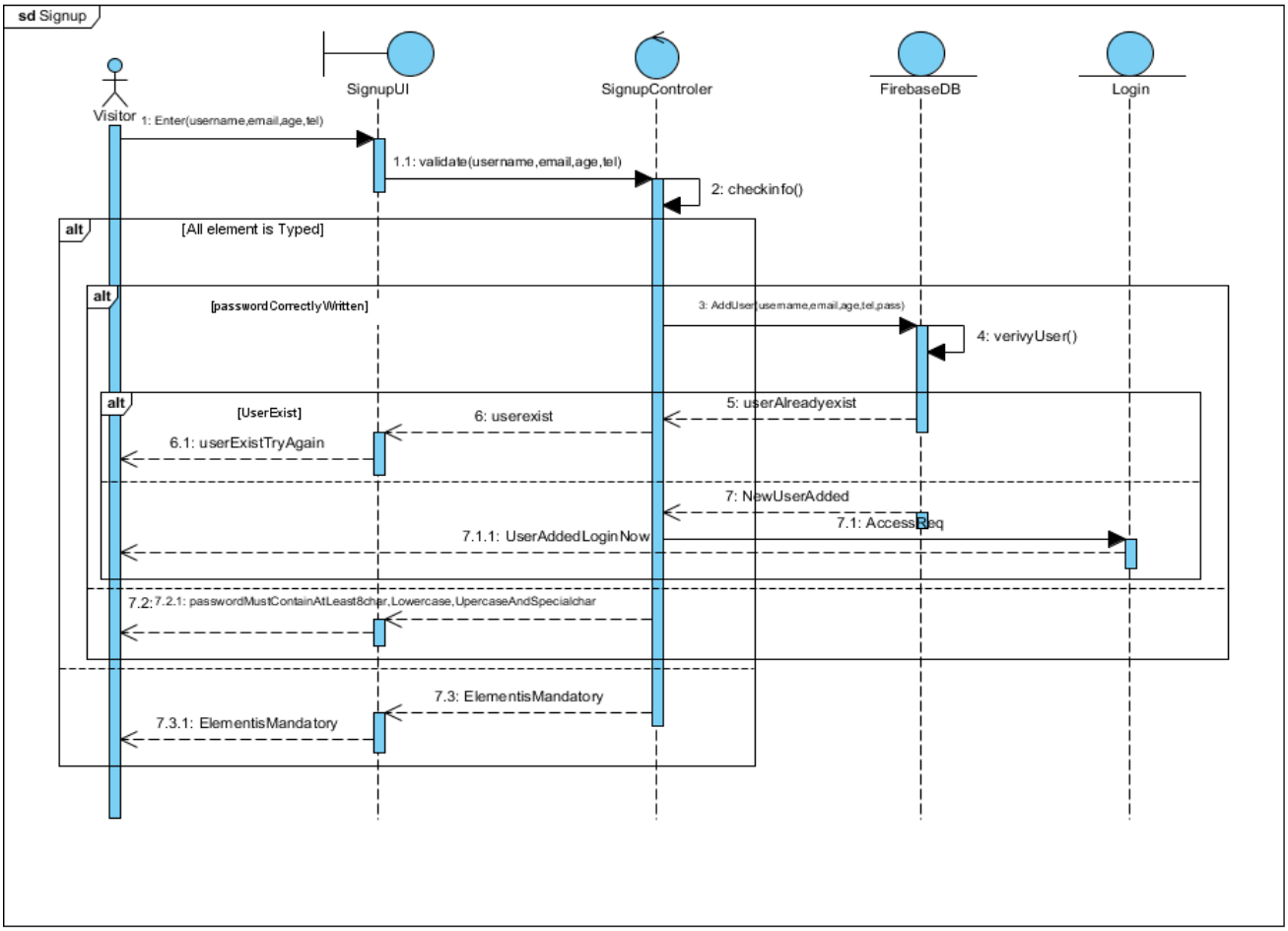

c. Calendar

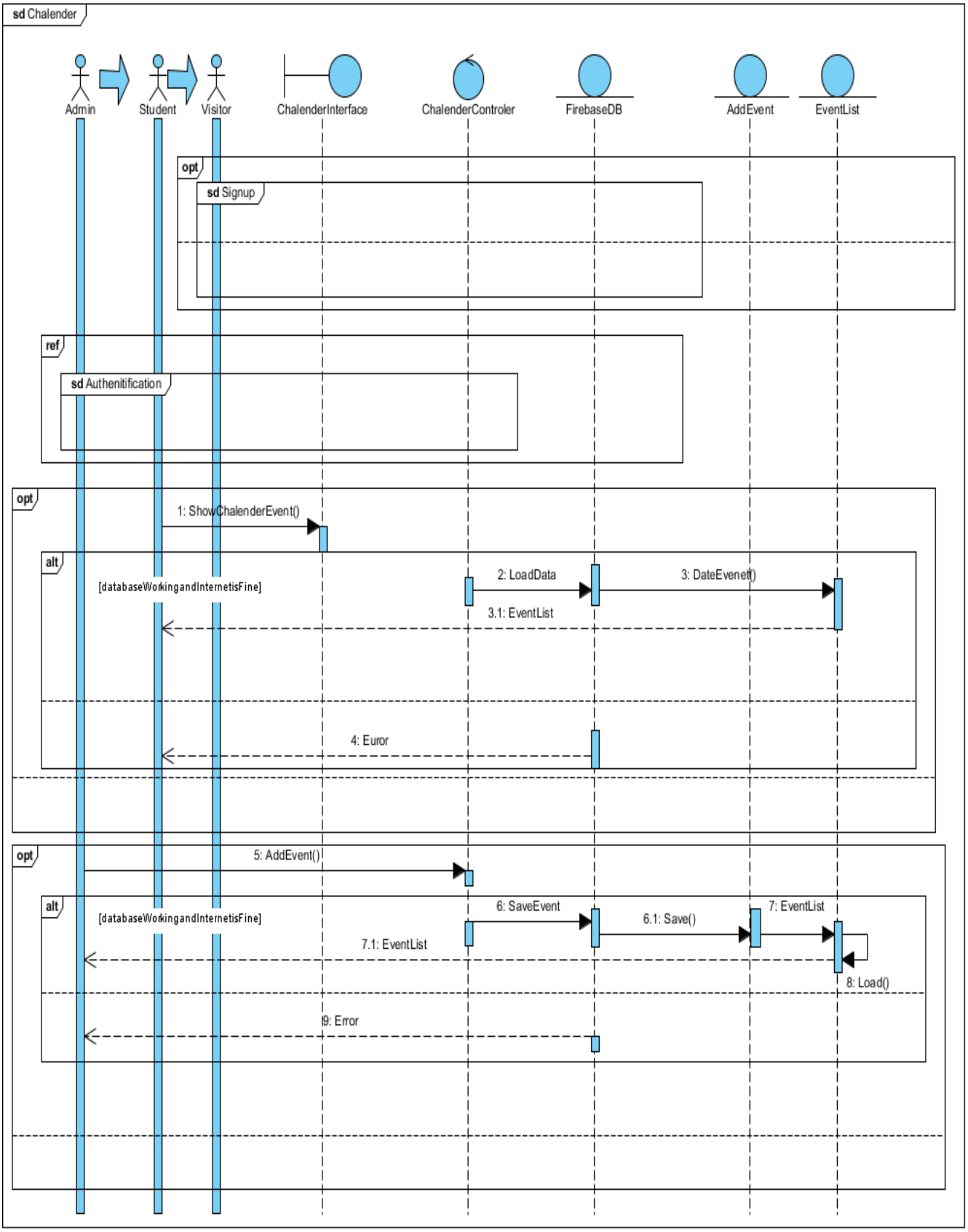
sd Chalender
Admin
Student
Visitor
ChalenderInterface
ChalenderControler
FirebaseDB
AddEvent
EventList
opt
sd Signup
ref
sd Authenitification
opt
1: ShowChalenderEvent()
alt
[databaseWorkingandInternetisFine]
2: LoadData
3: DateEvenet()
3.1: EventList
4: Euror
opt
5: AddEvent()
alt
[databaseWorkingandInternetisFine]
6: SaveEvent
6.1: Save()
7: EventList
7.1: EventList
8: Load()
9: Error

d. Study

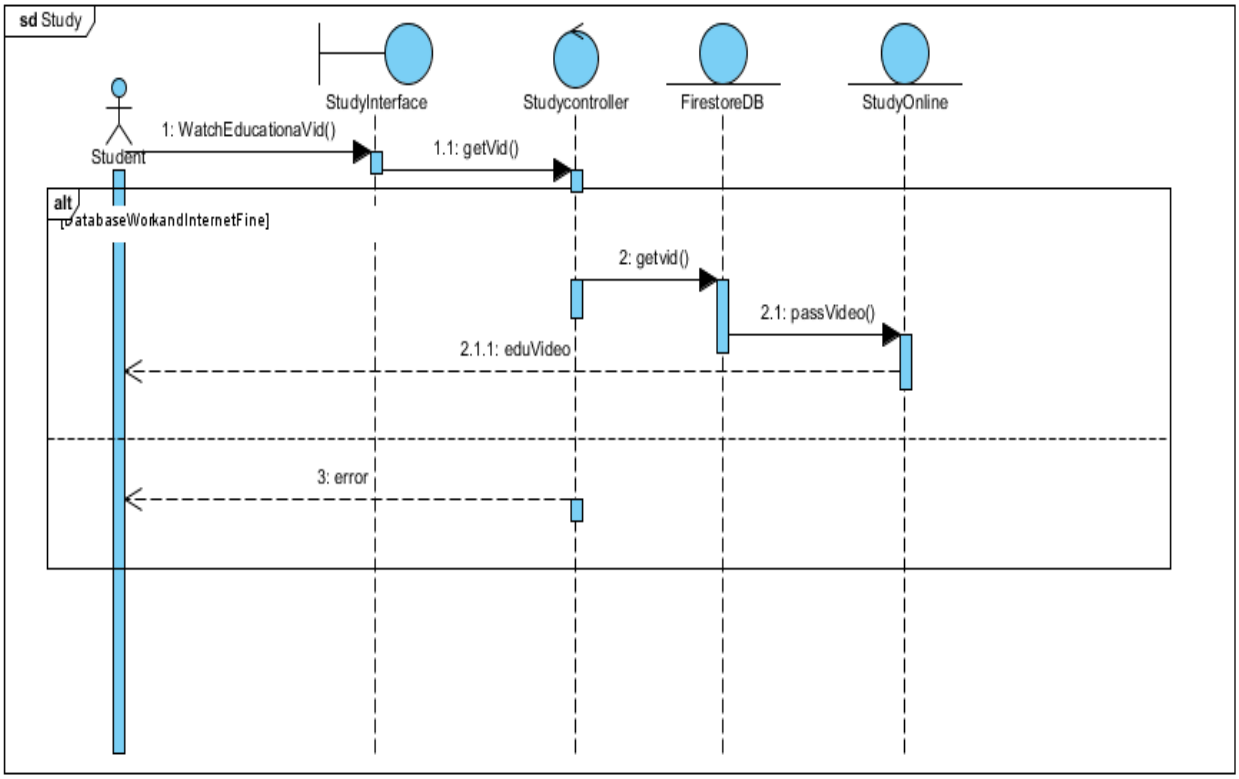

Z2N0Cg==8f06db4a81f88266accb706a